Prodelin Corporation

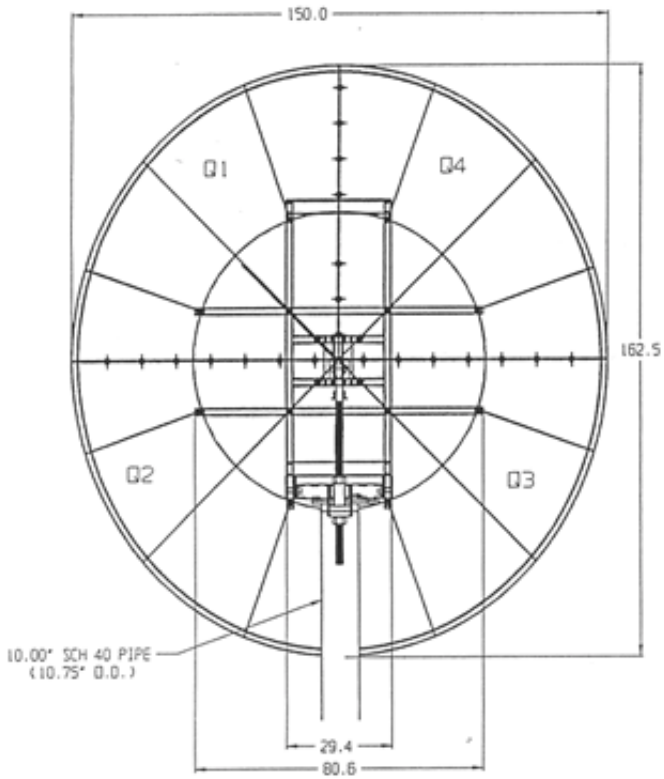

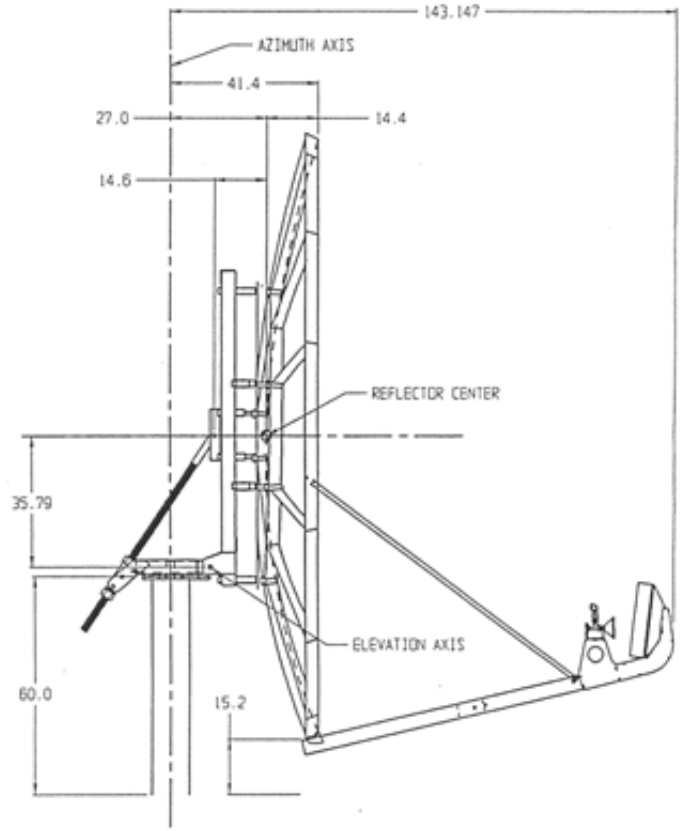

3.8 Meter Dual Optics Offset Series 1388
Ku-Band Receive/Transmit
Antenna Geometry

5002-345 (11-99) © PRODELIN