Prodelin Corporation

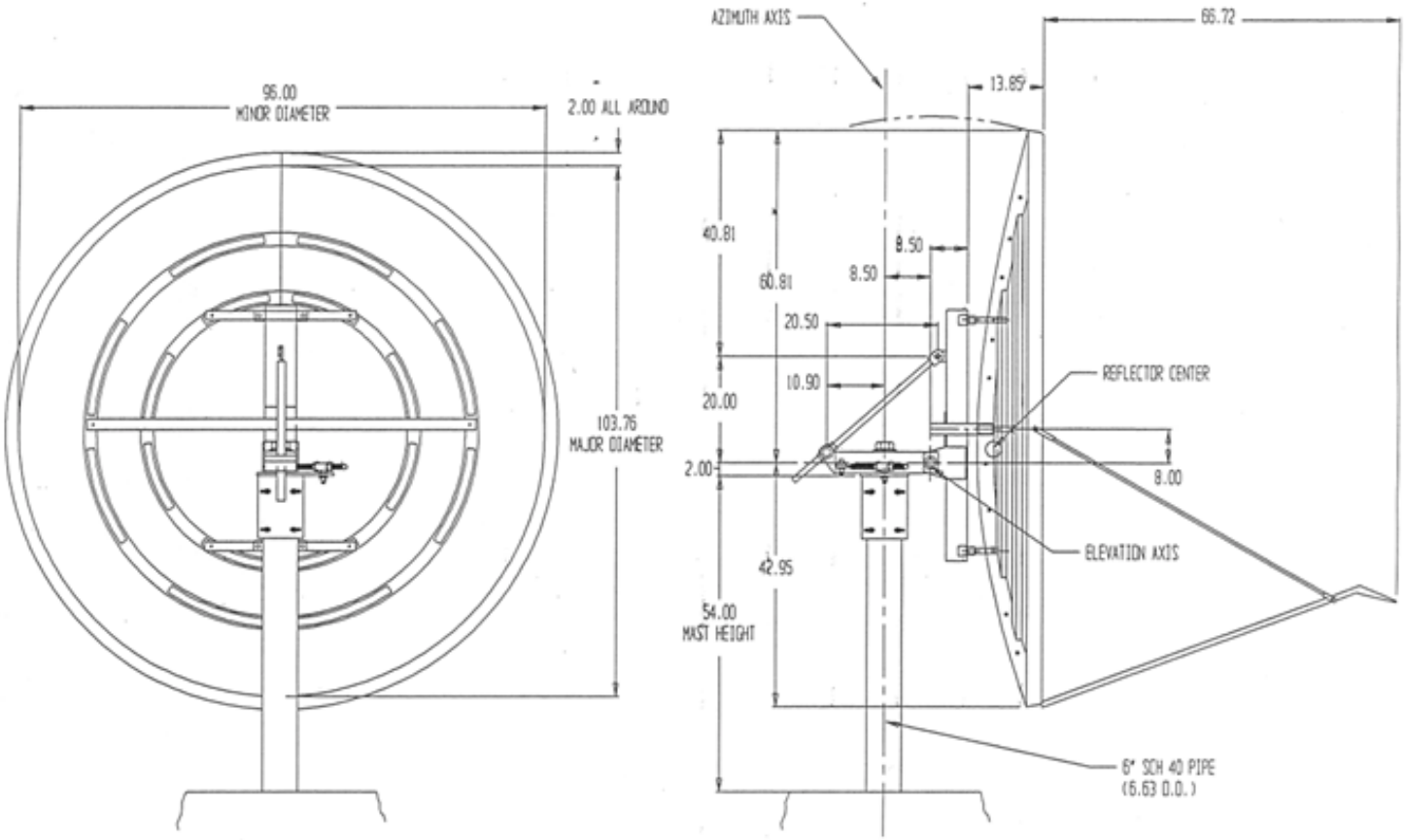

2.4 Meter Series 1251
C and Ku-Band Receive/Transmit
Antenna Geometry

5002-298 (4-98) © PRODELIN